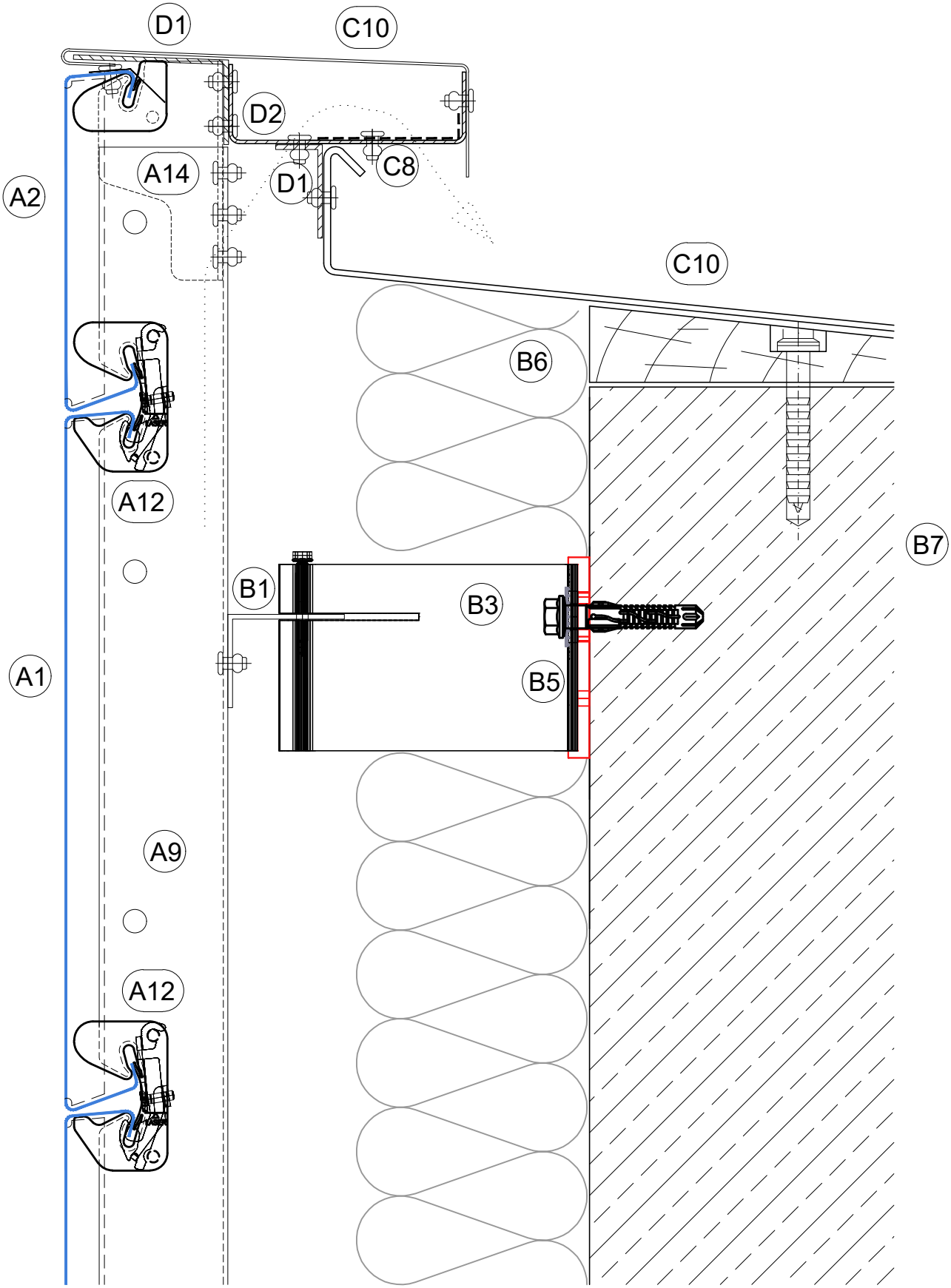

Head
Attika

5-C 109