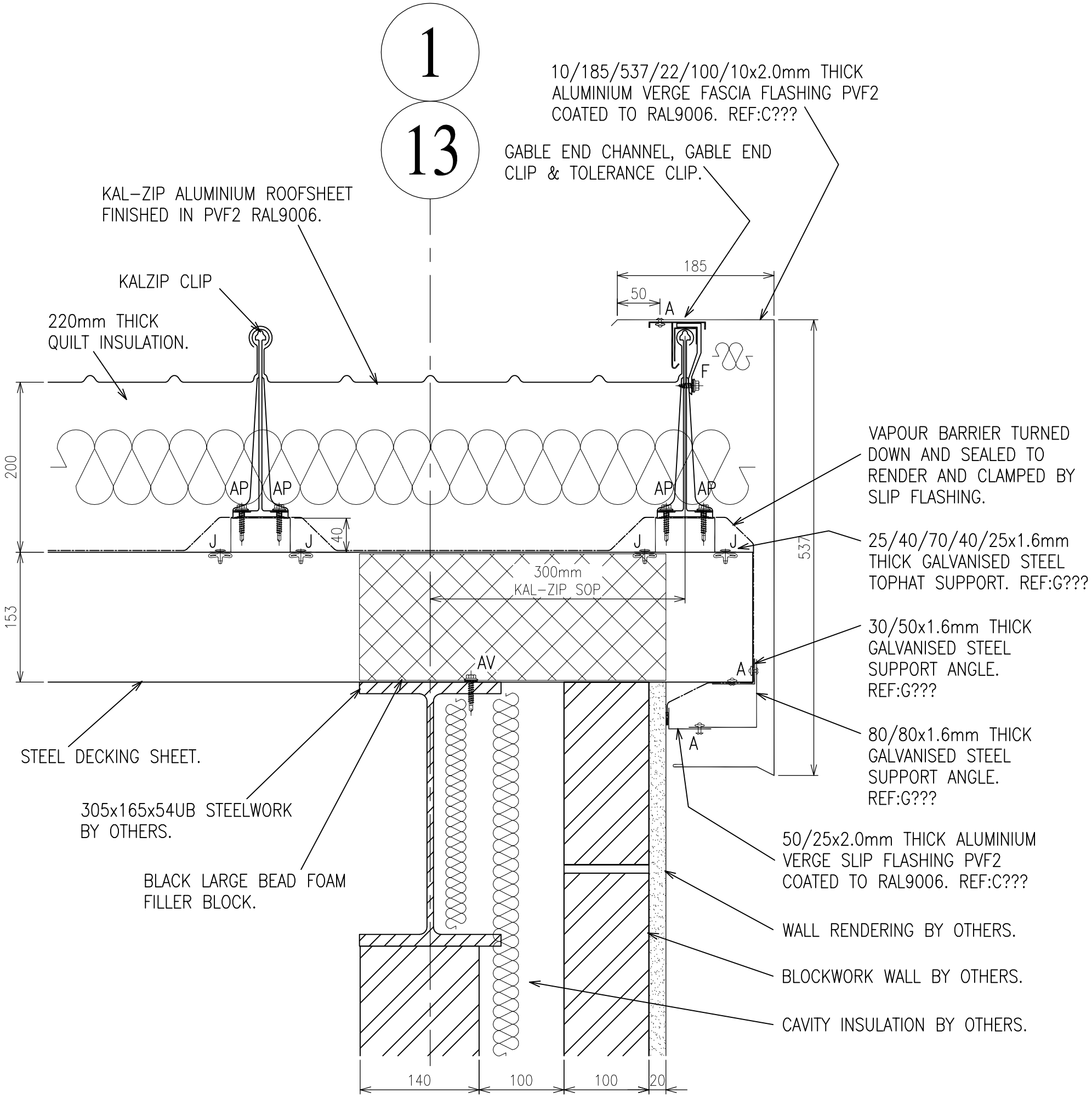

Notes

1. All Dims in mm Unless Otherwise Stated
2. Do Not Scale From This Drawing
3. Isolate All Dissimilar Materials With Barrier Tape
4. If in Doubt, ASK

Kalzip
A Tata Steel Enterprise
Kalzip Ltd
Haydock Lane, Haydock, St. Helens
MERSEYSIDE, WA11 9TY

Tel: 01942 295 500
Fax: 01942 295 508

This drawing is copyright and is issued on the express condition that it is not to be copied or disclosed by or to any unauthorised person or firms without prior consent in writing from Kalzip.

Project: Double Skin Constructions			
Client: Kalzip			
Title: Typical Kalzip Verge Detail Along GL-1&13			
Scale: 1:5	Date: 23/02/07	Drawn: JS	Checked:
Dwg No. KZ-0-DS-D-4-010			Rev: F